Wilhelminenhofstr. 76-77
D-12459 Berlin / Germany
Tel: +49 30 54 99 18 0
Fax: +49 30 54 99 18 45
eMail: info@spirka-schnellflechter.com

www.spirka-schnellflechter.com

Spirka Schnellflechter GmbH

High-Speed Braiders
DRATEX

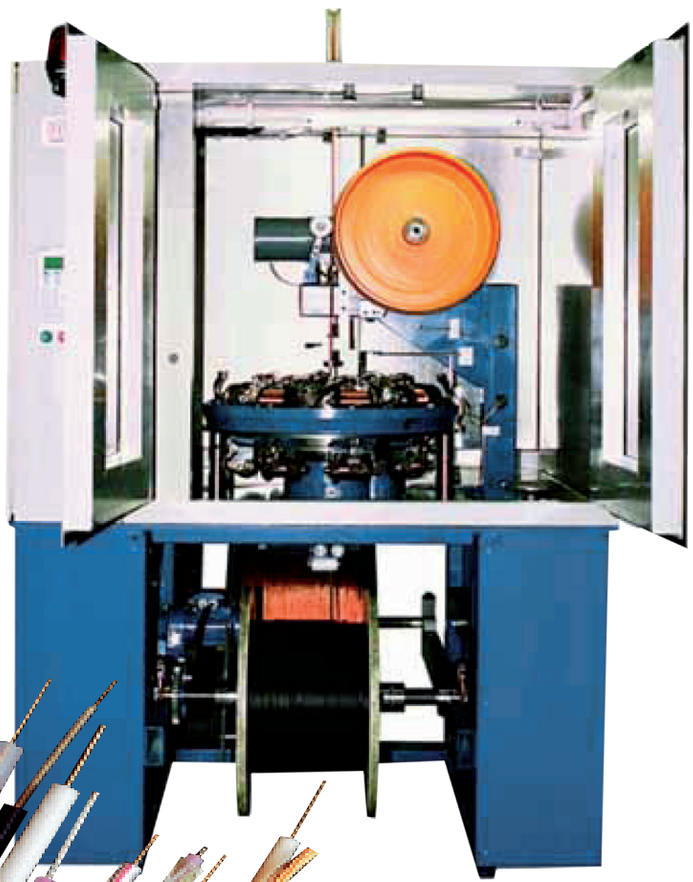

The Dratex is the ideal choice when both high performance and high quality are required. Its flexible design, with great operator access, results in fast bobbin change-overs and allows easy machine maintenance.

The patented carbon fiber lever arm is lighter and more durable, thus allowing for higher speeds. The arm's superior strength counteracts the stress of high-speed operation and requires minimal maintenance. A large capstan reduces bending of the braided cable.

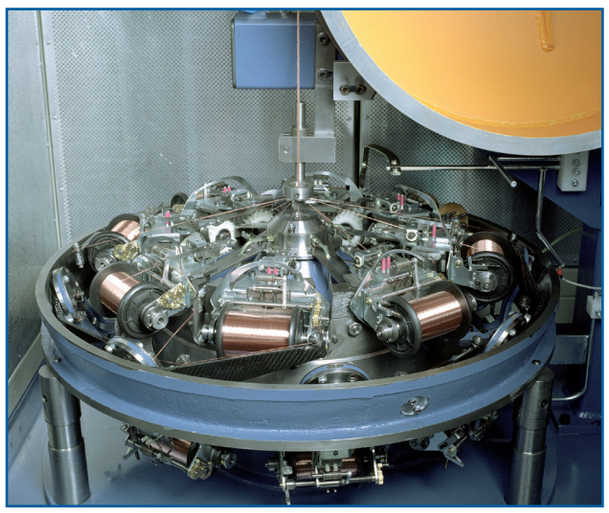

Higher speed braiding and longer runs for a wide range of wire & cable, textile, and hose applications.

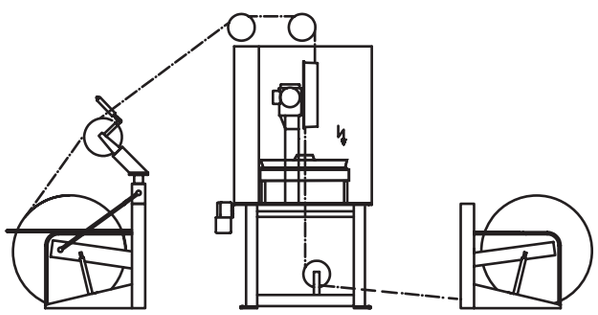

Complete Braiding & Winding Solutions

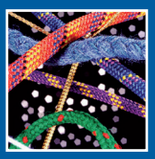

Flexibility

- Digital control of speed, braiding pitch, and braiding length
- Greater operator access
- Simple, quick setup and bobbin changes
- Easy machine maintenance
- Run wire or textile
- Braid hose or cable

Machine Features

- High speed production runs at 180 rpm / 110 rpm
- Strong, lightweight carbon fiber lever arm
- Siemens PLC software allows switching between metric and inch
- Reinforced, improved bobbin carrier
- Integrated payoff and takeup units
- Programmable operator panel
- Lifetime lubricated sealed bearings
- Automatic break sensors and cable feed control
- Variable pitch control
- Easy tension adjustment of carriers
- Choice of bobbin capacity
- Optional empty bobbin detector system
- Automatic central lubrication

Model	Dratex 16	Dratex 24
Number of Carriers	16	24
Bobbin Rotation Speed	60-180 rpm	30-110 rpm
Jog Speed	12 rpm	8 rpm
Bobbin Types	Spirka S1, S2, S3, HSP, WSN, S16-3107	
Bobbin Capacity	max. 380 cm^3	
Braid Material	All soft metals and textile materials	
Pull-off per Bobbin Revolution	Change gears: 3 - 88 mm	
	Continuous drive: 3 - 90 mm	Continuous drive: 6 - 150 mm
Diameter of Pull-off Capstan	480 mm or 610 mm	610 mm
Central Passage	15 mm	40 mm
Braid Diameter Maximum	14 mm	28 mm
Reel Size	ø 800 mm (integrated reel winding)	
Motor Output	3.0 kW	3.0 kW
Floor Space	1600 mm x 1500 mm	1800 mm x 1700 mm
Machine Weight	1000 kg	1300 kg
Noise Level	78 dB(A)	78 dB(A)
Carrier Models	2013/5 & 2023/5 2016/5 & 2026/5 2017/2 & 2027/2 2017/3 & 2027/3	

Our Group of Companies goes from Strength to Strength

SKET Verseilmaschinenbau GmbH
www.sketvmb.de

QUEINS www.queins.com
www.queins.com

stolberger KMB - Maschinenfabrik GmbH
www.stolberger.com

HENRICH GERMANY
www.henrich.net

WARDWELL
www.wardwell.com